XC978

-WHEEL LOADER

All Rights Reserved

Materials and specifications are subject to change without notice.
Featured machines in photos may include additional equipment.
See your XCMG dealer for available options.

High efficiency and reliability Inheritance of classic and high maturity and stability

OVERVIEW

MODEL CHARACTERISTICS

- It features high efficiency, energy-saving, and strong power.
- The three-element torque converter and the fixed shaft power shift transmission feature high maturity and reliability.
- The 3550mm wheelbase features high mobility and flexibility and is applicable to all kinds of working sites.
- The bucket is made of high strength material to realize high wear and impact resistance.
- The diversified configurations and complete attachments adapt to the construction needs in different regions and under different working conditions.
- The optional A/C and the sound insulation and noise reduction measure build elaborately a comfortable operating environment.

PERFORMANCE HIGHLIGHTS

Outstanding capability, breakout force at ≥22t.
High adaptability, with turning radius at 6,037mm (tire center).

MARKET POSITION

Industry 3t single-model sales champion.

The warranty period for the front and rear frames, boom, and arm is 2 years or 5,000 hours (whichever comes first), which is far beyond the loader industry warranty level to manifest the top quality of XCMG loaders.

The design of super-heavy-duty structural parts optimizes the hinge point of the boom to greatly improve the reliability of the bucket and boom. Based on finite element analysis and optimization, it ensures the structural strength and prolongs the life of the machine. The cab and the hood adopt an integral skeleton structure, with thick plates and high rigidity, which are more reliable and safer. The whole machine can be used for more severe working conditions. The bucket is enhanced with wear-resistant design, and key parts are made of wear-resistant and impact-resistant high-strength steel plates.

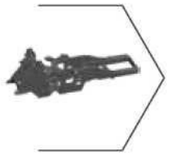

XCMG'S EXCLUSIVE TECHNOLOGIC ADVANTAGES

The certified safe and comfortable ROPS/FOPS cab with ergonomic internal arrangement provides the driver with first-class operating environment

Power System:
The reasonable matching between engine and transmission guarantees faster response of machine and meanwhile reduces the machine fuel consumption by 10%.

The full-automatic power shift transmission can automatically adjust the gear of loader to guarantee the running of loader under highest efficiency and most energy-saving status.

Z-Linkage System:
The traditional Z-linkage system is in-depth optimized by XCMG to incorporate powerful force at all positions.

Intelligent Hydraulic System
The load-sensing variable hydraulic system supplies on-demand power to the steering system and various working devices to reduce fuel consumption.

Attachments:
XCMG offers diversified attachments to meet your personalized needs and promote the productivity.

The maintenance-free full-hydraulic wet type brake axle incorporates the automatic limited-slip differential function to sufficiently play the powerful insertion force of the machine.

I SPACIOUS CABIN

The luxury cab equivalent to car level features large space, broad visual field, no blind spot, and high driving safety and comfort.

The easily accessible operating units and buttons can easily realize all kinds of operation actions. The full-coverage exquisite interior trims, rubber floor, and three-layer composite noise reduction materials build a best operation environment.

The panorama rear window, high-mounted rear lamps, and reversing alarm equipped ensure good visual field and reversing safety.

RELIABLE

XC978

POWER SYSTEM

Hydraulic torque converter: Single-stage, single-phase, and three-element type. Transmission: Full-automatic transmission, with KD function and 4 forward and 3 reverse gears, featuring outstanding performance. It adapts to the operating needs under diversified working conditions of the loader. Drive axle: Wet type axle, limited slip differential for front axle, and fixed front axle and central swing rear axle installation.

XC9 series loader incorporates incomparable reliability to ensure long-time continuous working and reduce unnecessary maintenances. The long-tested drive parts and heavyweight structural parts work with more diligent detail design to ensure that the machine is competent for more stringent working conditions.

The world's leading design means and intelligent manufacturing technologies ensure that the structural parts, including front and rear frames and attachments, meet the working needs under diversified heavy working conditions. The concise large articulated open-type heavyweight structural parts reduce the stress concentration and meet the working needs under diversified severe working conditions. The heavyweight articulated structure guarantees longer life.

This product is powered by Euro-V compliant electronic control turbocharged engine, in which the high pressure common rail fuel supply system is controlled by ECU to achieve accurate fuel injection control, high pressure, low pressure fluctuation, optimal combustion rate, atomization, and ignition timing, high combustion efficiency, high power reserve, and strong power. This engine features the advantages of high reliability, high adaptability, low fuel consumption, and low emission.

Radiator system

The single-layer radiator system with large fin spacing + rotary openable A/C radiator prevent the accumulation of material at radiator openings and meanwhile ease the maintenances. Every radiator can be replaced rapidly and independently.

The transmission and drive axle of industry's renowned brands are installed to guarantee reliable performance and durable life. The rear axle can swing for ±13° to maintain four tires on the ground, in order to keep stability on rugged roads and easily play the powerful traction force of the machine.

In response to the heavy working conditions, the boom and bucket breakout forces are optimized to promote the digging capacity by 15%. The boom and bucket can realize composite motions to further promote the working efficiency.

The selection of bucket depends on the material density and the expected bucket fullness coefficient. Thanks to the bucket design, the excellent rollback angle in all directions, and the outstanding bucket loading performance, the actual bucket capacity is generally higher than the rated capacity.

HANDLING BUCKET

The shape design of the bucket is optimized to fully fill the bucket faster and more efficiently during the digging and meanwhile achieve high fullness coefficient. The guide plates are installed on the top of the bucket to reduce the spilling of material during the lifting and meanwhile effectively protect the cab.

SHORTER WORK CYCLE TIME

The displacement of the hydraulic pump and the travel of the lifting cylinder are optimized to increase the boom lifting speed by 12% and increase the steering speed by 10%. In addition, the steering angle of the machine is increased to 40° to achieve shorter driving route and faster work cycle during the loading operations.

OPTIONAL ATTACHMENTS

XC9 series loader is provided with diversified optional attachments so that the customers can choose different attachments depending on own needs, such as gripping of lumbers, side -dumping in tunnels, handling in quarries, earthwork loading, and material lifting. In response to the digging operation, multiple buckets are offered at the customer' s choice, such as mine bucket for rocks and light material large bucket for coal or wood bits. In addition, the optional quick change structure can be installed to realize “One machine for multiple applications”.

Z-LINKAGE SYSTEM

The traditional Z-Linkage System is in-depth optimized by XCMG to achieve powerful bucket breakout force and outstanding boom lifting capability at any position. The redesigned hydraulic system realizes the simultaneous tipping and lifting motion of bucket to achieve more powerful digging capacity and faster material loading of the bucket.

Depending on diversified operation needs, various high firmness and durability attachments can be installed to maximize the productivity and achieve more applications. No matter the repeated handling of material, the loading and unloading of cargo, the griping of lumbers or steel tubes, or other applicantion, these attachments can effectively fulfill diversified tasks and promote the efficiency.

EFFICIENT

The full-automatic power shift transmission can automatically adjust the gear of loader to guarantee the running of loader under highest efficiency and most energy-saving status.

The full-automatic power shift transmission matches reasonably with engine system. The transmission can match with the parameters, including the engine speed and machine speed, to automatically adjust the gear of loader and guarantee the running of machine under highest efficiency status. This can speed up the cycle time and reduce the fuel consumption. If the loader requires more power under complicated working condition, the operator can manually downshift to a lower gear to meet the working needs.

HIGH EFFICIENCY POWER

The machine is powered by Cummins Euro-V compliant (Optional Euro-III compliant) electronic control turbocharged engine, in which the high pressure common rail fuel supply system is controlled by the ECU to achieve the advantages of accurate fuel injection control, high consumption efficiency, and low fuel consumption and emission.

HIGH-EFFICIENCY HYDRAULIC SYSTEM

The full-variable load-sensing hydraulic system supplies on-demand power to the hydraulic devices and steering device to eliminate energy waste and reduce fuel consumption. The powerful hydraulic system can guarantee the quick response within shorter cycle time and more stable operations by excellent control of load and attachment.

EXCELLENT POWER MATCHING

The full-automatic power shift transmission matches reasonably with engine system. The transmission can match with the parameters, including the engine speed and machine speed, to automatically adjust the gear of loader and guarantee the running of machine under highest efficiency status. This can speed up the cycle time and reduce the fuel consumption. If the loader requires more power under complicated working condition, the operator can manually downshift to a lower gear to meet the working needs.

LOW-SPEED ENERGY-SAVING RADIATOR SYSTEM

The automatic stepless-regulated low-speed radiator system can remarkably reduce the fuel consumption besides the quiet working characteristic.

We all know that the operator feeling comfortable can relieve the fatigue feeling and promote the working efficiency and operation safety. Therefore, designing an industry leading cab around the operator to provide a spacious, safe, quiet, and comfortable environment can further improve the operation safety and maintain high productivity.

SINGLE-JOYSTICK CONTROL

The optional multifunctional joystick can ease the operator's operations and meanwhile accurately control the hydraulic functions. The forward, reverse, and kick-down functions are provided on the control panel.

DRIVING STABILIZING SYSTEM

While driving on rugged roads, the optional riding controll system can improve the driving stability and load retentivity. The operator can be more confident duringthe transfer operations at high speed to promote the productivity.

EFFICIENT

CE COMPLIANT CAB ACCESS

The driver can open the cab door by standing on the ground and then access the cab safely and conveniently via the obliquely installed ladder. The optimally arranged handrails can maintain the safe three-point contact at all times.

CAB AIR FILTER

The cab air inlet port is located on the right side of the cab and is installed with easily replaceable air filter. The fresh air is supplied into the cab after its dusts and particles are filtered out by the air filter. In addition, the air filter works with the excellent airtightness of the cab to play a slight pressurization role to further isolate the external dusts. The working environment is clean and comfortable and is comparable with the working efficiency.

With a broad vision, the cab boasts the industry' s best 316.5 ° effective horizontal visual angle. Cab: This machine is equipped with FOPS/ROPS pressurized cab, with heating and A/C system and diaphragm molded rubber floor. Instruments: The multifunctional combination instrument centrally displays all important information within the operator' s visual range. Seats: The adjustable suspension seats are fixed on the cab floor. Certification: The cab has been tested and certified as per ROPS standard (ISO 3471) and FOPS standard (ISO 3449).

The large opening hood, easily accessible pressure measurement and lubricating points, centrally arranged electric fuse case, and the machine diagnostic interface ease the daily maintenances and repairs of the machine.

First-class machine repair and maintenance access and reasonable machine layout and structural design.

LUBRICATION SYSTEM

During the running of loader, the optional automatic lubrication system controls the lubrication to provide longer running time and reduces the maintenance cycles. The operator can change the lubrication interval depending on the application.

ENGINE HOOD

The integral large-angle side-opening engine hood + uplifting rear hood ease the maintenances of engine oil filter, diesel filter, transmission and torque converter oil filters, and air filter and meanwhile ease the cleaning of every radiator fin.

RADIATOR SYSTEM

The single-layer radiator system with large fin spacing + rotary openable A/C radiator prevent the accumulation of material at radiator openings and meanwhile ease the maintenances. Every radiator can be replaced rapidly and independently

CENTRALIZED OIL FILLING AND DRAINAGE

The inaccessible hinge lubricating points and the engine oil/water drainage ports are centrally guided out to ease the maintenances.

STANDARD CONFIGURATION

Power System

- Automatic power shift
- Manually controlled forward/reverse changeover joystick
- Transmission oil level sight indicator
- Front axle limited-slip differential lock

Engine

- Cummins Engine,Air filter, prefilter, and primary and secondary filters
- Coolant level sight indicator
- Intake preheater
- Fuel filler filter screen
- Fuel prefilter with water separator
- Fuel filter
- Exhaust heat insulator
- External radiator air inlet protection
- Centrifugal air prefilter
- Reversible cooling fan
- Single electronic accelerator pedal
- Engine oil drainage extraction port
- Coolant drainage extraction port

Electric System

- 24V pre-wiring system for optional accessories
- 24V/75V alternator
- Fuel Gauge
- Hourmeter
- Horn (Including reversing buzzer)
- Integrated combination instrument
- Diesel level gauge
- Transmission oil temperature gauge
- Engine coolant temperature gauge
- Warning lamps and indicator lamps
- Engine oil pressure gauge
- Battery voltmeter
- Low brake pressure warning
- Engine tachometer
- Reversing camera display
- Negative switch

Lamp

- Double LED headlamp with high beam and low beam
- Double brake lamp and rear lamp
- Turn signal lamp with hazard warning lamp function
- LED working lamps (4 front and
- 2 rear lamps)
- Reversing warning
- Rotary warning lamp

Warning and Indicator Lamps

- Battery charging
- Parking brake

Warning and Display Information

- Engine coolant temperature
- Engine oil pressure lamp
- Transmission oil temperature
- Braking pressure (Only low pressure warning)
- Applied parking brake (Only display)

Cab

- ROPS (ISO 3471)
- FOPS (ISO 3449)
- Sound insulation lining
- Cigarette lighter
- Lockable door
- Cab A/C system and defroster with fresh air inlet
- Interior lamp
- Interior rearview mirror
- Double exterior rearview mirror
- Right sliding window
- Colored safety glass
- Adjustable steering wheel
- Storage box
- File pocket
- Front sun visor
- Front and rear windscreen washers
- Front and rear windscreen wipers
- FM radio
- Engine starter key
- Door lock key
- Acoustic material interlayer
- Upholstery
- Ashtray
- 12V power socket
- 24V power socket
- Defroster
- A/C thermostat
- Anti-skid mat
- MP3 player
- 2kg powder fire extinguisher
- Emergency escape hammer
- Air-cushioned adjustable seat
- Seat belt
- Cup holder

Hydraulic System

- Pilot control main valve
- Variable Displacement Axial Plunger Pump for Following Systems :

  Working hydraulic system

  Steering hydraulic system (Priority)

  Boom lifting limit

  Bucket automatic leveling Hydraulic oil level indicator

  Hydraulic oil cooler

  Independent radiator

  Forward/reverse rotation of cooling fan

  Working device lock

  Double-acting hydraulic cylinder

  Working device joystick

Brake System

- Independent double-circuit service brake
- Electro-hydraulically controlled parking brake
- Single brake pedal

Pressure checking

- Working system pressure
- diagnostic interface
- Steering system pressure diagnostic interface
- Pilot system diagnostic interface
- Transmission pressure diagnostic interface

Automatic lubrication system

- Automatic lubrication pump and controller

Other equipment

- Fender
- Safety lock handle (For transportation)
- Lifting eye
- Traction pin

Vandal Proof Lock for Following Parts

- Engine compartment
- Radiator grille

Other

- Driver's tool kit

Optional configuration

Powertrain system

- Quick refueling system
- Turbocharger delayer
- Engine delayed flameout
- Exhaust gas injector
- Fuel preheating system

Hydraulic System

- Stabilizer module function
- Pressure relief safety cap for hydraulic oil tank
- Electro-hydraulic proportional control

Steering system

- Power steering system

Cab and covering parts

- Electric heating seat
- Three-point seat belt
- 4kg fire extinguisher (At stand)
- Rear sun visor
- Seat heating system
- Electric heating rearview mirror

Electric System

- Strobe lamp
- Power master switch with lock (Red)
- Start isolator switch (Yellow)
- Engine emergency stop switch

Fire Extinguishing System

- Automatic fire extinguishing system

Anti-corrosion processes

- Heavyweight anti-corrosion
- coating for whole machine
- Glue sealing for electric
- harnesses

Tires

- Michelin tires (L-4/5)

Bucket

- Rock type
- Light material type

*No further information of sample contents, product structure and configuration parameters updates. There maybe some difference between sample books and material objects. Please kindly prevail.

MAIN PARAMETERS

Items			
Rated operating load		7800	kg
Bucket capacity		4.5	m^3
Machine weight		24500	kg
Dumping height		3220	mm
Dumping distance		1214	mm
Wheel base		3550	mm
Tread		2320	mm
Height of hinge at maximum lift height		4395	mm
Working height(fully lifted)		6060	mm
Max.breakout force		220	kN
Ultimate tipping load/kg(straight)		18200	kg
Ultimate tipping load/kg(full steering)		15600	kg
Hydraulic cycle time-raise		6.2	s
Hydraulic cycle time-down		3.3	s
Hydraulic cycle time-tilt		1.2	s
Total hydraulic cycle time		10.7	s
Min. turning radius over tyres(tire center)		6037	mm
Min. turning radius over tyres(tire outward)		6374	mm
Min. turning radius over tyres(bucket outward)		7105	mm
Articulation angle		40	°
Gradeability		27	°
Tyre size		26.5-25-20	
Overall machine dimension LXWXH		8850*3230*3620	mm
Engine Model		Cummins	
Emission standards		EURO V	
Rated Power/Speed		242/2100	kW/rpm
Peak Torque/Speed		1478/1400	N.m/rpm
Fuel Tank		400	L
Hydraulic Tank		160	L
Coolant/L		62	L
Engine oil/L		34	L
Transmission oil/L		50	L
Front and Rear axle oil/L		60/55	L
Transmission Pattern		Electric control fixed shaft	L
Transmission gear		4 forward 3 reverse	
Travel speed	I-gear(F/R)	7/7	km/h
	II-gear(F/R)	13/13	km/h
	III-gear(F/R)	28/28	km/h
	IV-gear(F/R)	42/-	km/h
Front and Rear axle differential pattern		LSD	

OVERALL DIMENSIONS

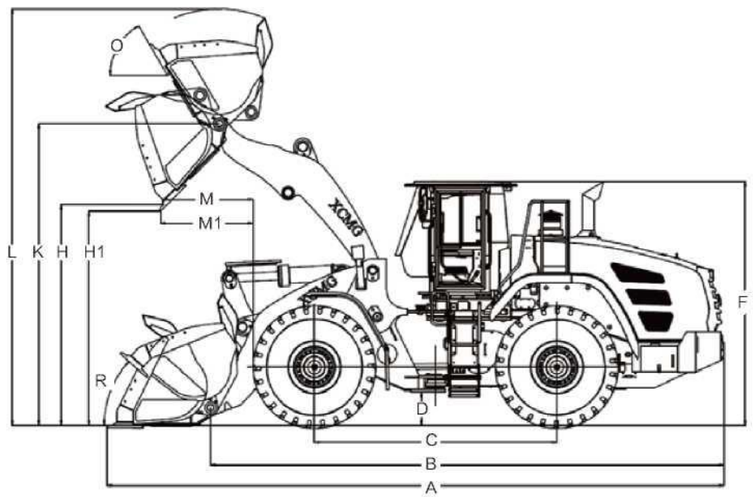

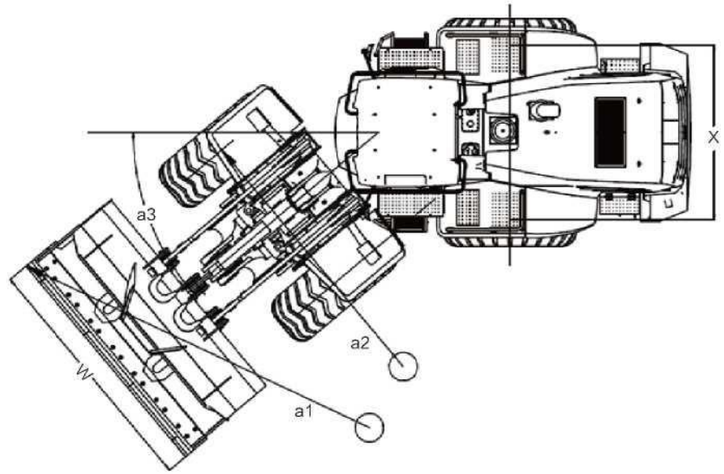

SPECIFICATION OF VARIANT ATTACHMENTS

Item	Log clamp I	Interchangeable paired/ staggered clamp	Unit
Dump clearance at maximum lift(front dump)	3435	2585	mm
Reach at maximum lift(front dump)	1835	1355	mm
Dump clearance/reach at maximum lift (side dump)	/	/	mm
overall height at maximum lift	/	/	mm
Max. dumping angle(work tool)	30	56	°
Max.opening	2538	2225	mm
Min. clamping diameter	1000	670	mm
Max.working width(snowplow)	/	/	mm
Slewing angle (horizontal)	/	/	°
Swing angle (snowplow)	/	/	°
Rack back angle at ground	20	30	°
Length(work tool)	1700	1835	mm
Width(work tool)	2680	2680	mm
Height(work tool)	1830	1810	mm
Tine length(pallet fork)	/	/	mm
Overall machine dimensions-length	9130	9275	mm
Overall machine dimensions-width	2995	2995	mm
Overall machine dimensions-height	3620	3620	mm

XC978-E

Drive axle

maintenance-free full hydraulic wet drive axle, safe and reliable

Cab

FOPS&ROPS certified safe and comfortable cab with ergonomically designed interior to provide the driver with an excellent operating environment.

Intelligent hydraulic system

load-sensing variable hydraulic system, supply on demand, automatically adjust the supply of hydraulic system capacity, reduce fuel consumption

'Transmission

automatic power shift transmission, automatically adjust the loader gear to ensure that the loader is working in the most efficient and energy-saving state

Excellent delivery efficiency

Through the reasonable matching of engine and transmission, the response of the whole machine is faster, and the fuel consumption of the whole machine is reduced by 10%,

Easy to maintain

The integral electric back-flip hood + upturnable rear baffle cover is convenient for maintenance service to overhaul the equipment.

■Tools

XCMG can provide you with a variety of tools to meet individual needs and improve production efficiency.

■Z-Linkage System

XCMG has deeply optimized the traditional Z-Linkage for great power in any position.