de Heus- XCMG
Stougjesdijk 153 3271 KB
Mijnsheerenland NL
info@heustractors.com
+31 (0) 186 61 2333

XCMG XE20E

Fitted as standard with:

- Kubota Stage-V
- Hammer and sort function (proportional)
- Quick-change function
- 2 travel speeds
- Extendable track system

€25,500.00

Specifications

ENGINE

Rated speed	2300

HYDRAULIC SYSTEM

Driving system pressure	210
Main pressure safety valve	253
Main pump output	64.4
Steering pressure	35
Swing system pressure	110

OTHER

Diesel tank	25
Engine oil capacity	5
Hydro tank	20

TECHNICAL SPECIFICATIONS	
Arm digging force	8
Ground pressure	26.4
Max traction force	14
Max. Digging force	16
Rotation speed	8

WEIGHT	
Own weight	1975

Technical drawing

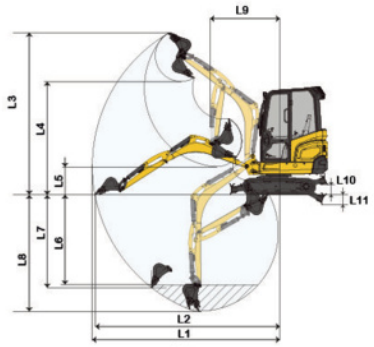

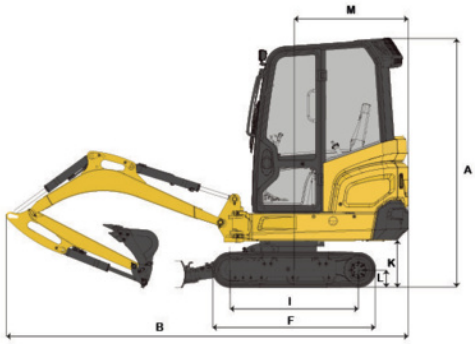

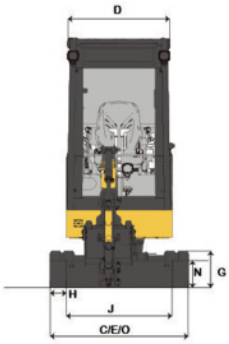

(A) Height to top of roof	2350
(B) Overall length with bin	3860
(C) Overall width	1300
(D) Width of upper structure	990
(E) Chassis width	1300
(F) Track length	1564
(G) Height of tracks	380
(H) Width of tracks	230
(I) Cradle base	1230
(K) Counterweight free space	465
(L) Ground clearance	155
(L1) Max. excavation radius	4120
(L10) Maximum lifting height of dozer blade	230
(L11) Max cutting depth of dozer blade	230
(L2) Maximum reach at GRP	4070
(L3) Max. Digging height	3620
(L4) Max. Tipping height	2560
(L5) Minimum unloading height	628
(L6) 8 ft digging depth with flat floor	2000
(L7) Max. Vertical digging depth	2140
(L8) Max. Digging depth	2580
(L9) Min. forcing radius	1520
(M) Tail swing radius	1100
(N) Height of dozer blade	260 mm

Pictures

XCMG
XE20E

XCMG
XE20E

XCMG

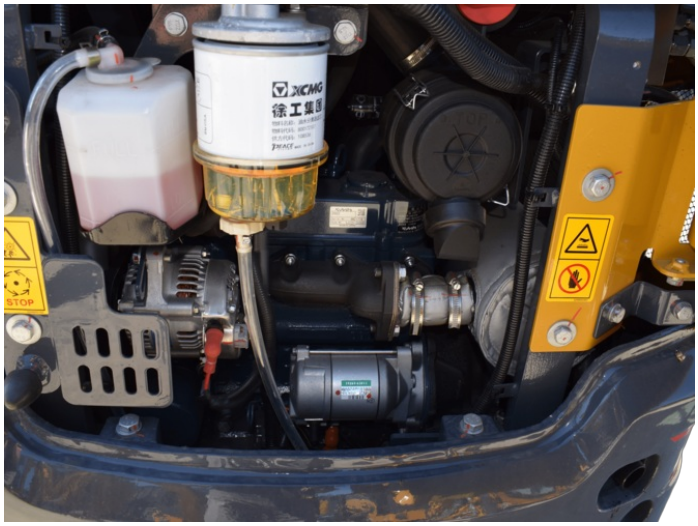
XCMG
徐工集团

CAUTION

WARNING

CAUTION
CAUTION